CODE	DESCRIPTION	POS.	GR.
K070019972B	FRONT PLASTIC PART	1	
K070020072A	RIGHT FILTER SADDLE	2	
K070021372A	LEFT FILTER SADDLE	3	
K070020172B	FILTER+FRAME	4	
G0540A	SECCOTECH REAR PLASTIC PART ASSY	5	
K070020372A	HANDLE	6	
K070022672A	HANDLE CAP	7	
J190002568A	HANDLE RUBBER INSERT	8	
K070020472B	DRAINING CAP	9	
K070020561A	TOP COVER	10	
K070020664C	WATER CONTAINER	11	
K070021098A	FLOAT	12	
L020027200B	ELECTRONIC/CONTROL PANEL GR.	13	
K070023761A	KEYBOARD	14	L020027200B
K070005795A	GLASS	15	L020027200B
K070021200B	KEYBOARD SURFACE FILM	16	L020027200B
K210015800A	CONTROL BOARD	17	
K210017500A	HUMIDITY SENSOR BOARD+FLAT	18	
K200003500A	POWER BOARD+FLAT	19	
K210017600A	PROBE	20	
K210016200A	TANK MICROSWITCH CABLE	21	
J060003500A	MOTOR	22	
J060003600A	FAN	23	
G0541A	SECCOTECH PIPES+HE ASSY	24	
L020027600A	COMPRESSOR GR	25	
G0542A	COMPRESSOR ACCESSORIES ASSY	26	L020027600A
K070020972B	BASIS	27	
J190002300A	VIBRATION DAMPER	28	
L020031100A	WHEELS GR.	29	
J190002496B	WATER DRAINING CAP	30	
K210016300A	COMPRESSOR WIRING	31	
K160011000A	POWER CABLE	32	
K210017400B	MICROSWITCH	33	
K070020772D	CONVEYOR	34	
G0543A	SECCOTECH INTERNAL PLASTIC PART ASS	35	
K100030800A	DISCHARGE PIPE	36	G0541A
K100030900B	SUCTION PIPE	37	G0541A
K100031200B	CAPILLARY+FILTER	38	G0541A
K070023896B	CABLE FASTENER	39	
K040010100A	MOTOR BRACKET	40	

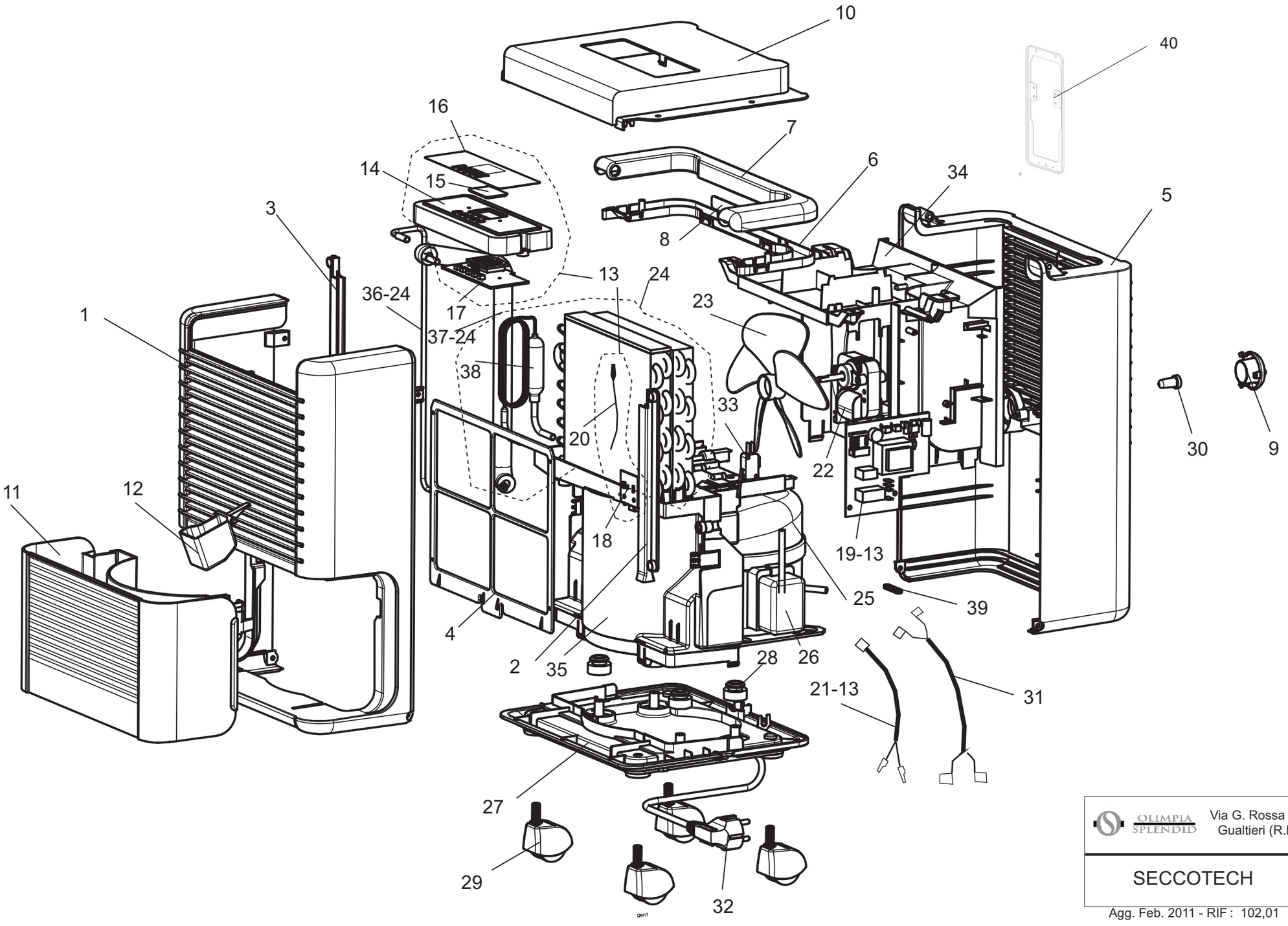

OLIMPIA SPLENDID
Via G. Rossa 1-3
Gualtieri (R.E.)

SECCOTECH

Agg. Feb. 2011 - RIF : 102,01