| CODE | DESCRIPTION | POS. | GR. |
|---|---|---|---|
| 281639A125 | CONDENSE TANK | 1 | |
| 281448B72 | FLOATING HOLDER | 2 | G0001B |
| 281199B | FLOATING | 2 | G0001B |
| 281485B124 | FRONT PANEL | 3 | G0301A |
| 273098A | ADHESIVE LABEL | 3 | G0301A |
| 271944A | FRONT AIR FILTER | 4 | |
| 281229C72 | vassel | 5 | |
| 242364A54 | handle | 6 | |
| 281344A72 | MICROSWITCH HOLDER | 7 | |
| 281483A72 | micro key | 7 | |
| 275930A | MICROSWITCH X3C302K2LB | 8 | G0313A |
| 275962A | micro lever | 8 | G0313A |
| 213327A | angle iron | 9 | |
| 281939A72 | CONTROL PANEL COVER | 10 | |
| 271759A | ADHESIVE LABEL | 11 | G0003A |
| 276397A | ELECTRONIC BOARD | 12 | |
| 281940A124 | CONTROL PANEL | 13 | |
| 281997A | label | 14 | |
| 281509A | VIBRATION-DAMPING COMPRESSOR | 16 | G0304A |
| 243962A | VIBRATION-DAMPING SPACER | 16 | G0304A |
| 272185A | condenser coil insulator | 17 | |
| 276145A | EF83161.3 MICROSWITCH | 18 | G0315A |
| 144700A2 | washer nut | 19 | G0315A |
| 255827C | GENERAL WIRING | 20 | |
| 256447A | condenser coil | 22 | |
| 281484A124 | FRONT PANEL | 23 | |
| 276147B | GP14PB CUBIGEL COMPRESSOR | 24 | G0475A |
| 277589A | COMPRESSOR COVER | 24 | G0475A |
| 276478A | RELAY+KLIXON | 24 | G0475A |
| 254493A | capillary tube | 26 | |
| 276051A | TERMINAL BOX | 27 | |
| 255605A70 | SOURCE CABLE H05VVF 3X1 L.M.2(ART.7 | 28 | |
| 315123B | LOWER BASIS | 29 | G0507A |
| 255632A | EARTH CABLE | 29 | G0507A |
| 256507A | back evaporator coil | 30 | |
| 279304A | wheel | 31 | |
| 256508A | front evaporator coil | 32 | |
| 219010A | cover | 33 | |
| 281937B72 | evaporator comb | 34 | |
| 281938B72 | support comb | 35 | |
| 276377A | EVAP.TEMP.SENSOR | 37 | |

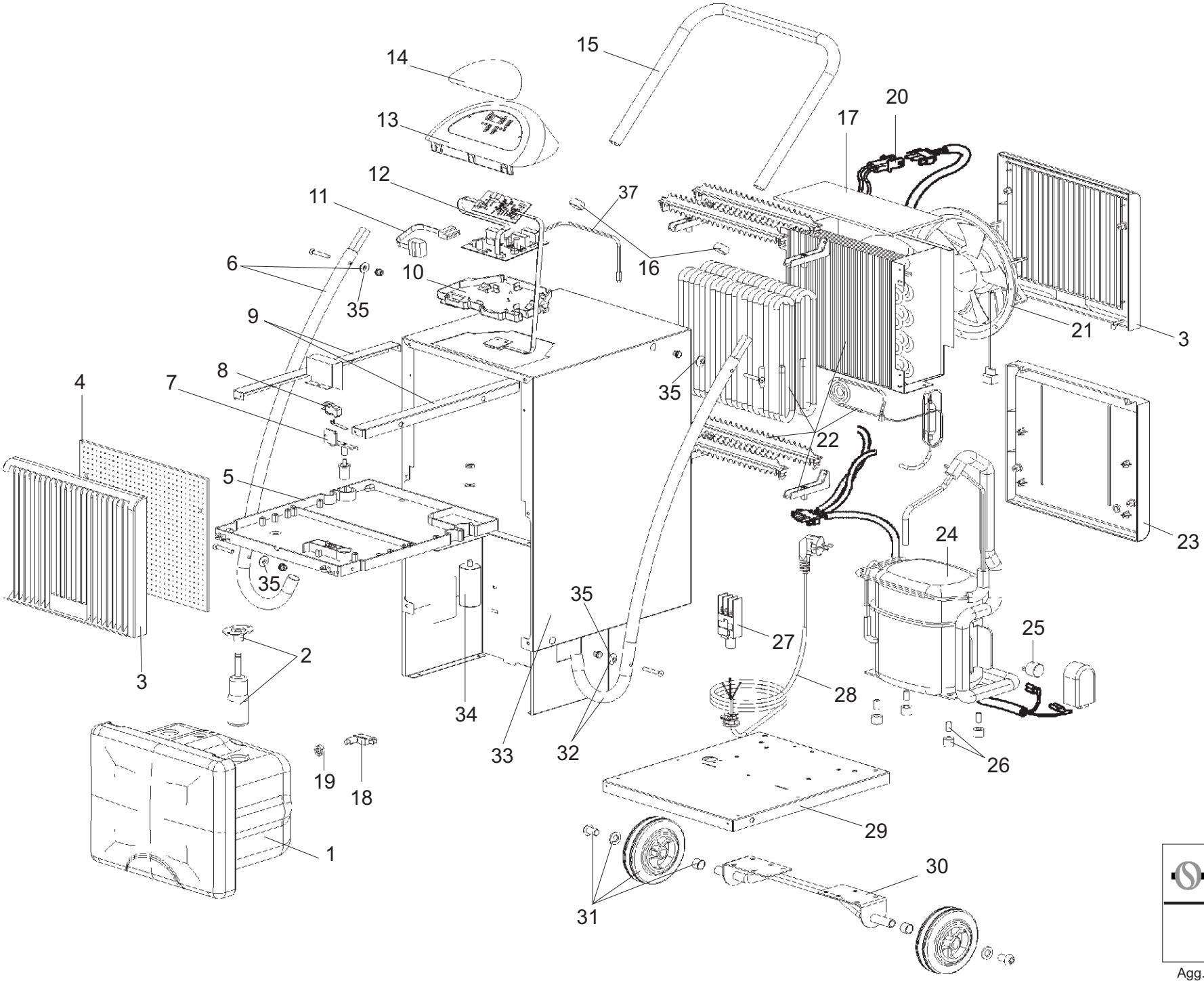


OLIMPIA SPLENDID Via G. Rossa 1-3 Gualtieri (R.E.)

SECCOULTRA

Agg. Maggio 2011 - RIF: 058.01